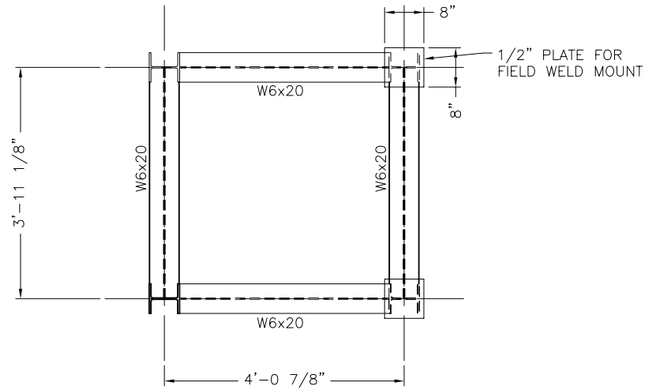

PLAN VIEW

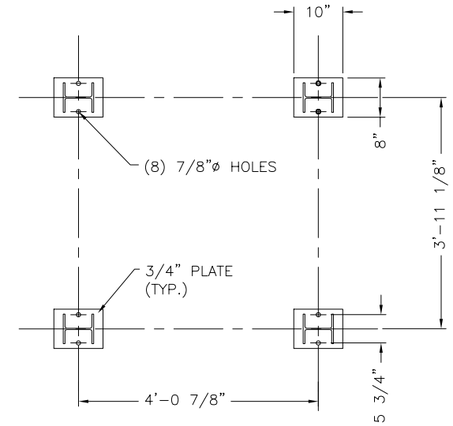

BASE PLATE PLAN VIEW

NOTES:

1. ALL WELDED CONSTRUCTION, UNLESS NOTED OTHERWISE.
2. ASTM A36 FOR ALL STRUCTURAL MEMBERS, UNLESS NOTED OTHERWISE.
3. ALL WELDS ARE 3/16" CONTINUOUS FILLETS, UNLESS NOTED OTHERWISE. ALL WELDS TO BE FULL PENETRATION, NO GAS BUBBLES, SCALE REMOVED AND CLEANED AS REQUIRED.
4. ALL HOLES TO BE 13/16" DIA., UNLESS NOTED OTHERWISE.
5. CARBON STEEL FINISH REQUIREMENTS: ALL MATERIAL IS COMMERCIAL BLASTED AND GALVANIZED WITH SW RE-COATABLE EPOXY, 4-6 DFT.
6. STEEL FABRICATOR TO TAG ALL COMPONENTS (BEFORE SHIPPING) PER ASSEMBLY MARK NUMBERS SHOWN ON BILL OF MATERIALS.
7. STEEL FABRICATOR TO PROVIDE A-325 GALVANIZED OR EQUAL BOLTS, NUTS, FLAT, BEVEL, AND LOCK WASHERS AS REQUIRED FOR ASSEMBLY.

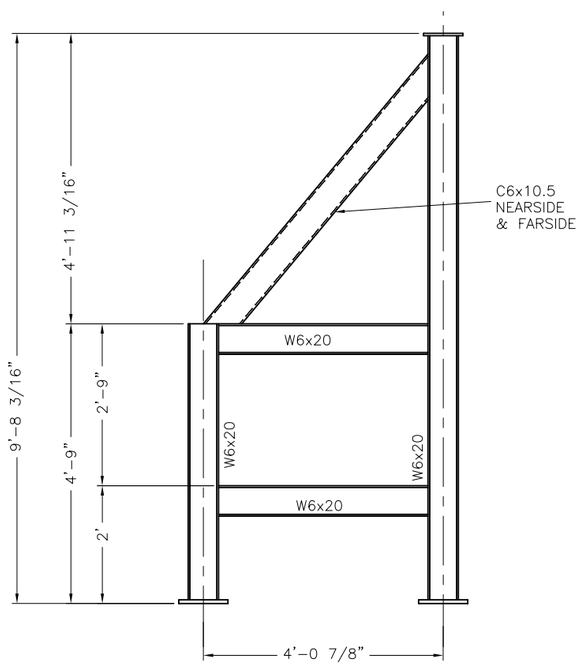

ELEVATION VIEW

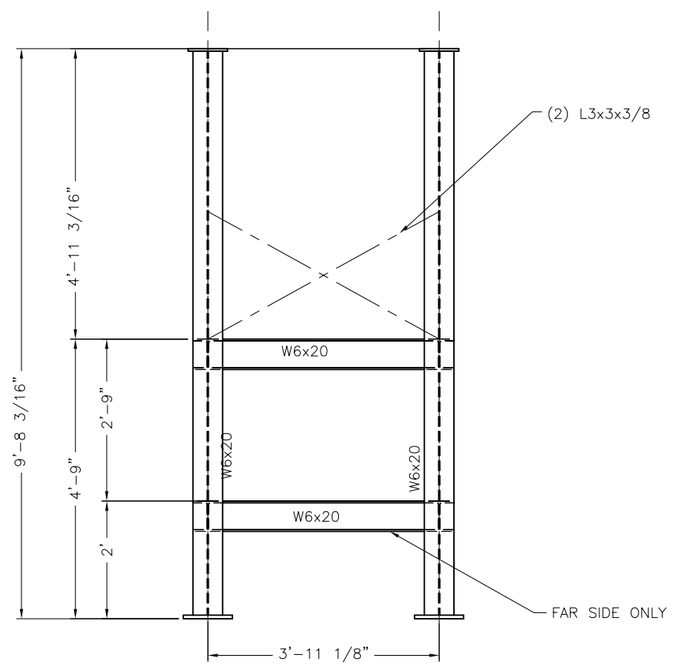

END VIEW

THIS DRAWING IS COPY RIGHTED
THIS DRAWING IS A TRADE SECRET AND ONLY ENTRUSTED TO THE RECIEVER FOR HIS PERSONAL USE. WITHOUT THE SIGNED WRITTEN CONSENT OF ANDRITZ-RUTHNER, INC., IT MUST NOT BE COPIED NOR MADE AVAILABLE TO THIRD PARTIES, INCLUDING COMPETITORS, NOR MADE ACCESSIBLE TO SUCH PARTIES. ANY ILLEGAL USE BY THE RECIEVER OR THIRD PARTIES FOR WHICH HE IS RESPONSIBLE CAN CONSTITUTE A CAUSE FOR LEGAL ACTION. THIS DRAWING MUST BE RETURNED ON REQUEST OF THE COMPANY.

ANDRITZ
ANDRITZ-RUTHNER, INC.
1010 COMMERCIAL BLVD. SOUTH
ARLINGTON, TEXAS 76001
(817) 465-5611

STATE OF CONNECTICUT • PROFESSIONAL ENGINEER • LICENSED • PEN 23800 • WILLIAM F. POLLOCK

REV	REVISION	DATE
0	FOR FINAL REVIEW/BUILDING PERMIT	06/05/06

DRAWN BY: JEN DATE: 04/19/06
CHECKED BY: DATE:
APPROVED BY: DATE:
SCALE: 3/4"=1'-0" FILE 152456011
SIZE DDS40

JOB NAME: CITY OF STAMFORD CONNECTICUT SOLIDS DRYING PROJECT

TITLE: GENERAL ARANGEMENT DUCT SUPPORT STRUCTURE (011)

PROJECT NUMBER 1524
DRAWING NUMBER 560-11 REV 0
SHEET 1 OF 1